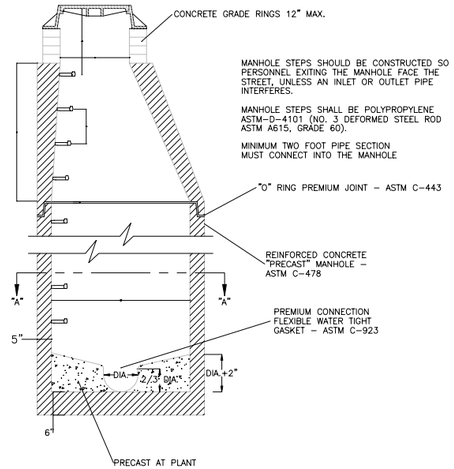

STANDARD SANITARY MANHOLE

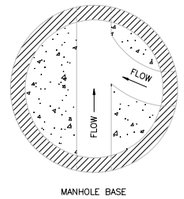

SECTION "A"-"A"

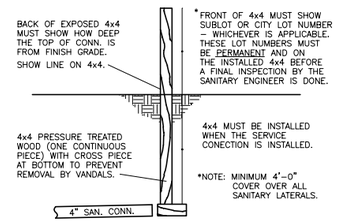

TYP. SEWER CONNECTION MARKER DETAIL

(TO BE PLACED AT THE END OF EVERY SANITARY LATERAL)

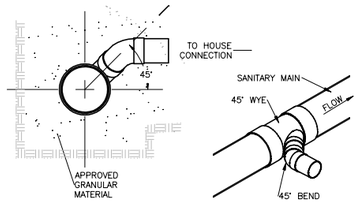

WYE DETAIL

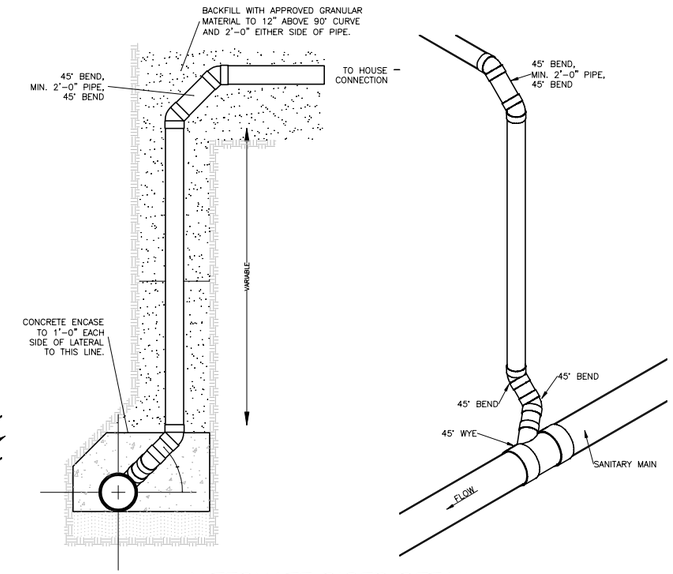

ALTERNATE RISER DETAIL

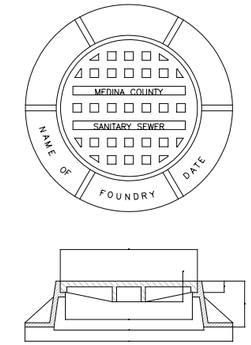

BOLT DOWN MANHOLE LIDS ARE REQUIRED ON ALL SANITARY MANHOLES LOCATED IN EASEMENTS. THE CASTING SHALL BE NEENAH FOUNDRY R-1782 WITH N-1780-0007 TWO (2) BOLT COVER, OR EAST JORDAN IRON WORKS FRAME NO. 1710 TWO (2) BOLT (ALL BOLTS TO BE STAINLESS STEEL).

MANHOLE FRAME SHALL BE NEENAH FOUNDRY R-1782 WITH N-1780-0007 COVER, OR EAST JORDAN IRON WORKS FRAME 1710 WITH TYPE "A" COVER.

1/2" FELT BETWEEN 4'x 4' BOX OUT & PAVEMENT "USE ODOT SPEC. BP-2 FOR REINFORCING" CONCRETE FOR BOX OUT SHALL BE THE SAME AS PAVEMENT

WATERTIGHT MANHOLE FRAME & COVER SHALL BE NEENAH R-1916-D OR EAST JORDAN 1120 PT WITH FOUR STAINLESS STEEL BOLTS.

MANHOLE COVER & FRAME

PIPE SIZE	INSIDE DIA. OF MANHOLE	TYPE OF MANHOLE
8"-30"	48"	PRECAST
36"-48"	60"	PRECAST
54"-60"	72"	PRECAST
72"-84"	96"	PRECAST

MANHOLE DIAMETER

PIPE SIZE	DROP PIPE SIZE
8"-10"	6"
12"-15"	8"
18"-21"	10"
24"	12"
27"	15"
30"	18"
36"	24"

DROP PIPE DIAMETER

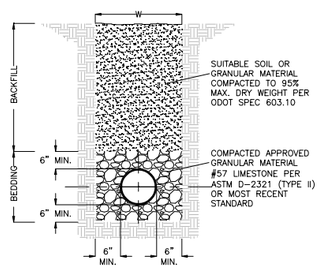

TYPICAL TRENCH DETAIL FOR PVC PIPE

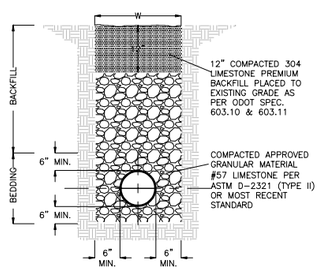

TYPICAL TRENCH DETAIL PVC PIPE FOR AREAS UNDER AND WITHIN THREE (3) FEET OF PAVEMENT

PIPE SIZE D	MAX. TRENCH WIDTH W
8"-15"	3'-0"
18"	3'-6"
21"	3'-6"
24"	4'-0"
27"	4'-0"
30"	4'-6"
36"	5'-0"
42"	5'-6"
48"	6'-0"
54"	7'-0"
60"	7'-6"
66"	8'-0"
72"	8'-6"
84"	9'-6"
90"	10'-0"
96"	10'-6"
102"	11'-0"
108"	12'-0"
114"	12'-6"
120"	13'-0"

TYPICAL TRENCH SECTION

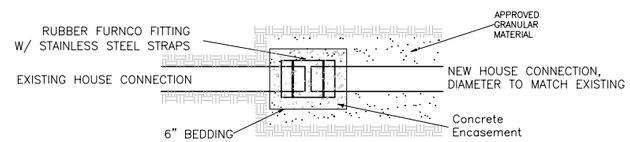

TYPICAL HOUSE CONNECTION RECONNECT

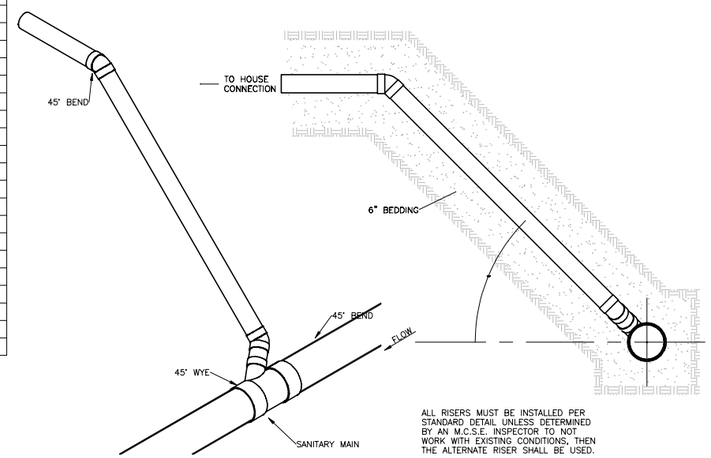

ALL RISERS MUST BE INSTALLED PER STANDARD DETAIL UNLESS DETERMINED BY AN M.C.S.E. INSPECTOR TO NOT WORK WITH EXISTING CONDITIONS, THEN THE ALTERNATE RISER SHALL BE USED.

STANDARD RISER DETAIL

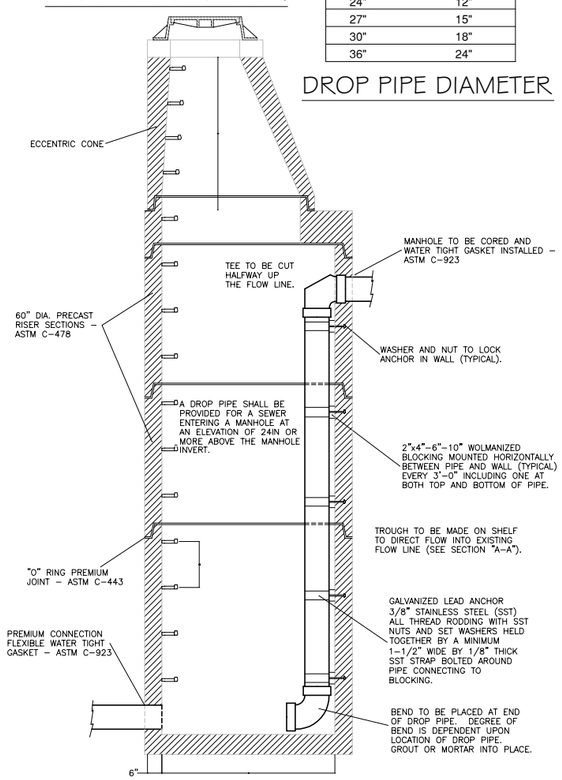

INSIDE DROP MANHOLE

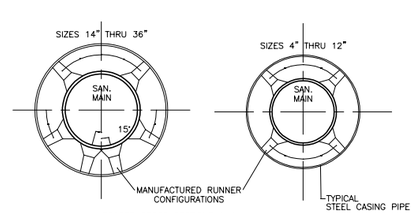

SPACER CROSS SECTIONS A-A

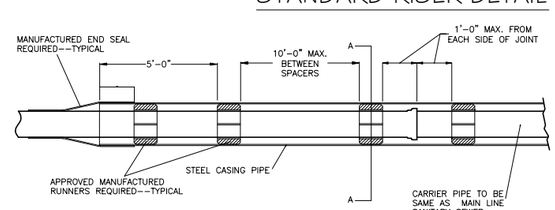

CASING DETAIL

COUNTY: MEDINA | TOWNSHIP: VARIOUS
DRAWN BY: | REVIEWED BY: | DATE: October 2014
SCALES : N/A / N/A

DATE	DESCRIPTION	BY:
6/2/2014	Removed Std. 48" Manhole Grating Detail	JS
6/2/2014	Removed Std. 60" Manhole Landing Detail	JB
10/23/2014	Updated trench bedding material standards	JB
3/1/2016	Updated Standard Sanitary Manhole Detail & Diameter	EJ
9/26/2017	Updated Casing Detail	BR
12/12/2017	Updated SAN MH & Inside Drop, Removed Alt MH Base	BR

- SANITARY SEWER STANDARDS -

- PLAN PREPARED BY -
MEDINA COUNTY
SANITARY ENGINEER
AMY S. LYON-GALVIN, P.E.
791 WEST SMITH RD.
MEDINA, OHIO 44256
(330) 723-9585

PROJECT NUMBER
000/00-00.0

SHEET NUMBER
/